SYM	REVISIONS	APPROVED	DATE

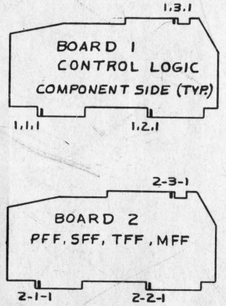

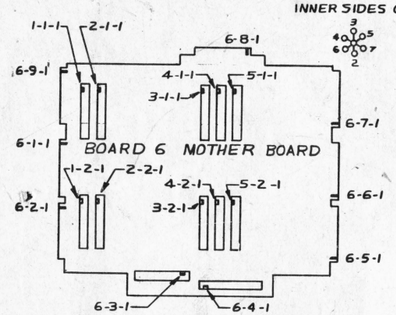

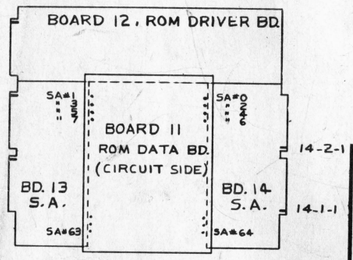

ASS'Y 7

BOARD 1, PLUG 3

A	NSST	1 NSST
B	YSST	2 YSST
C	LNRUN	3 LNRUN
D	LSC4	4 LSC4
E	LSTO	5 LSTO
F	LRDR	6 LRDR
H	-2.4V	7 -2.4V
J	LSRS	8 LSRS
K	ROM CLK	9 ROM CLK.
L	F.F. CLK.	10 F.F. CLK
M	TPA	11 TPA
N		12
P		13
R		14
S	GND	15 GND

BOARD 3, PLUG 1

A	-15	1 -15
B	GND	2 GND
C	-2.4	3 -2.4
D	ROM CLK.	4 GND
E	F.F. CLK	5 F.F. CLK
F	J45	6 J45
H	K45	7 K45
J	LRDM	8 LRDM
K	F45	9 F45
L	YW02201	10 YW02201
M	YC 022200	11 YC022200
N	F52 F34	12 F52 F34
P		13
R	YC 022211	14 YC22211
S	E52-F34	15 E52 F34
T	YC022201	16 YC022201
U	YC 022210	17 YC022210
V		18
W	YC 000022	19 YC 000022
X	YC 001122	20 YC 001122
Y	YC 01122	21 YC01122
Z	YC 01022	22 YC01022

BOARD 4, PLUG 2

A-M7	1	M3
B	Q	2 Q
C	b	3 M8
D	c	4 M4
E	e	5 M2
F	M2	6 M1
H	X,Z	7 M5
J	T	8 M6
K	Y, Z$_C$	9 M9
L	Y$_C$, P	10 f
M	WORD-COM	11 WORD-COM
N	IDE2	12 IDE2
P		13
R		14
S	IWTM	15 IWTM
T	GND	16 GND
U	F22B	17 F22B
V	F22	18 F22
W	F21B	19 F21B
X	F21	20 F21
Y	F20B	21 F20B
Z	F20	22 F20

BOARD 5, PLUG 3

A	-2.4V	1 -15V
B	F44	2 E44
C	F43	3 E43
D	F42	4 E42
E	F41	5 E41
F	F40	6 E40
H	F70	7 E70
J	F71	8 E71
K	F72	9 E72
L	F73	10 E73
M	F34	11 E34
N	F33	12 E33
P	F32	13 E32
R	F31	14 E31
S	F30	15 E30
T	F20	16 E20
U	F21	17 E21
V	F22	18 E22
W	F23	19 E23
X	F24	20 E24
Y	F25	21 E25
Z	H1B	22 GND

BOARD 6, PLUG 4

A	=1 NKDN	
B	=2 YRUN	
C	=3 YRAD	
D	=4 YSKD	
E	=5 YKDN	
F	=6 -15V	
H	=7 YINH	
J	=8 GND	
K	=9 YPSE	
L	=10 NK23	
M	=11 NK22	
N	=12 NK21	
P	=13 NK20	
R	=14 NK24	
S	=15 NK25	
T	=16 YDSP	
U	=17 YDC3	
V	=18 YDC1	
W	=19 YDC2	
X	=20 YDCO	
Y	=21 ŸSTP	
Z	=22 YFLT	

BOARD 6, PLUG 8

A	NK05	1	NK24
B	NHLD	2	NK20
C	YRAD	3	NK21
D	YFLT	4	NK22
E	YRUN	5	NK23
F	HOUT	6	HFMT
H	F20B	7	F21B
J	F22B	8	F23B
K	F24B	9	F25B
L	NFLT	10	
M	ITBB	11	ŸSTP
N	IADV	12	ICHF
P	IOFF	13	F41B
R	YINH	14	F40B
S	YKDN	15	YCOD
T	YGNPS	16	YDSP
U	YSKIC	17	YCHA
V	YAFŻ	18	ND60
W		19	SPARE 3
X	GND	20	GND
Y	SPARE 2	21	SPARE 1
Z	-15V	22	-15V

BOARD 13, PLUG 2

A	LC06	1	LC06
B	ISCL(+)	2	ISCL(-)
C	ISQL(+)	3	ISQL(-)
D	LIQM	4	LIQM
E	LIQN	5	LIQN
F	LQC4	6	LQC4
H	LQC5	7	LQC5
J	LQC1	8	LQC1
K	BIAS	9	BIAS
L	LQC3	10	LQC3
M	LQC2	11	LQC2
N	LQS1	12	LQS1
P	LQS2	13	LQS2
R	LQS3	14	LQS3
S	LQS4	15	LQS4
T	LQS5	16	LQS5
U	LQS6	17	LQS6
V	LQS7	18	LQS8

BOARD 2, PLUG 1

A	-15V	1 -15V
B	GND	2 GND
C	-2.4V	3 -2.4V
D	HIPS	4 F.F. CLK.
E	J13	5 E13
F	K13	6 F13
H	J12	7 E12
J	K12	8 F12
K	J11	9 E11
L	K11	10 F11
M	J10	11 E10
N	K10	12 F10
P	J04	13 E04
R	K04	14 F04
S	J03	15 E03
T	K03	16 F03
U	J02	17 E02
V	K02	18 F02
W	J01	19 E01
X	K01	20 F01
Y	J00	21 E00
Z	K00	22 F00

BOARD 3, PLUG 2

A	M3	1	M7
B	Q	2	Q
C	M8	3	b
D	M4	4	c
E	M0	5	e
F	M1	6	M2
H	M5	7	X,Z
J	M6	8	T
K	M9	9	Y,Z$_C$
L	f	10	Y$_C$, P
M	WORD COMM	11	N/C
N	GND	12	GND
P	YW22210	13	YW22210
R	YW22200	14	YW22200
S	YW22201	15	YW22201
T	YW22211	16	YW22211
U	YW21022	17	YW21022
V	YW22022	18	YW22022
W	YW20022	19	YW20022
X	YW21122	20	YW21122
Y	E44	21	E44
Z	F44	22	F44

BOARD 4 PLUG 3

A	IWTM'	1 IWTM'
B	YCOMM	2 YCOMM
C	D4	3 D5
D	D6	4 -D8
E	D2	5 -IA1
F	D1	6 IA2
H	-GO	7 D7
J	IA1	8 D0
K	-D2	9 -D0
L	D3	10 E1, Es
M	GO	11 G1
N	E0	12 D8
P	D9, DS	13 -D1
R	-D4	14 -E1, -Es
S	-D7	15 -D9, -Ds
T	-D5	16 -IA2
U	-D6	17 -E0
V	-D3	18 -G1

BOARD 6, PLUG 1

A	GND	1	60CPS
B	RS. SEN.	2	RS. SEN.
C	LDI8	3	FF. CLK.
D	ISDL(-)	4	LDI2
E	ISDL(+)	5	LDI1
F	LDI0	6	LDI0
H	LAI3	7	LAI3
J	ISAL(-)	8	LAI2
K	ISAL(+)	9	LAI1
L	LAI0	10	LAI0
M	ISPL(-)	11	LPO1
N	ISPL(+)	12	LPO0
P	LCO1	13	YDSP
R	LCO0	14	YCHA
S	LCO5	15	LCO5
T	LCO4	16	LCO4
U	LCO2	17	LCO2
V	LCO3	18	LCO3

BOARD 6, PLUG 5

A	LQ42-43	1	LJ44
B	LK41	2	LTEW
C	LJ41	3	LGEE
D	LK40	4	LIEF
E	LJ40	5	LDEF
F	LEEC	6	LEEC
H	LIOE1	7	LIOE1
J	LIOE2	8	LIOE2
K		9	
L	LJ34	10	LJ34
M	LK24	11	LK24
N	LESF	12	LESF
P	LJ50	13	LJ50
R	LQ53-54	14	LQ53-54
S	LQ52-54	15	LQ52-54
T	LJ51	16	LJ51
U	LK50	17	LK51
V	ISIL(-)	18	LSIL(+)

BOARD 6, PLUG 9

A	-15V	1	-15V
B	GND	2	GND
C	-2.4V	3	-2.4V
D	ŻDMV	4	ŻDHD
E	ŻDRL	5	ŻDRD
F	ŻDHL	6	F25
H	ŻDSL	7	ŻDRV
J	ŻACE	8	HDRR
K	LRCY	9	ROM CLK.
L	E13	10	F13
M	E1Z	11	F12
N	E11	12	F11
P	E10	13	F10
R	E04	14	F04
S	E03	15	F03
T	E02	16	F02
U	E01	17	F01
V	E00	18	F00

BOARD 14, PLUG 1

A	LQ42-43	1	LQ42-43
B	LK41	2	LK41
C	LJ41	3	LJ41
D	LK40	4	LK40
E	LJ40	5	LJ40
F	LIE2	6	LIE2
H	LIE0	7	LIE0
J	LIE3	8	LIE3
K	LIE1	9	LIE1
L	LJ34	10	LJ34
M	LK24	11	LK24
N	LESF	12	LESF
P	LJ50	13	LJ50
R	LQ53-54	14	LQ53-54
S	LQ52-54	15	LQ52-54
T	LJ51	16	LJ51
U	LK51	17	LK50
V	ISIL(-)	18	ISIL(+)

BOARD 1, PLUG 1

A	-15	1	-15V
B	GND.	2	GND
C	-2.4	3	-2.4
D	F.F. CLK.	4	F.F. CLK.
E	LRCY	5	LRCY
F	LSRS	6	LSRS
H	ROM CLK.	7	ROM CLK.
J	LRDR	8	LRDR
K	LSTO	9	LSTO
L	P.S. SEN.	10	P.S. SEN.
M	LTMS	11	LTMS
N	LTBS	12	LTBS
P		13	
R	LIBF	14	LIBF
S	LSC3	15	LSC3
T		16	
U		17	
V		18	
W	LSC1	19	LSC1
X	LSC2	20	LSC2
Y	LTBA	21	LTBA
Z		22	

BOARD 2, PLUG 2

A	U50	1	E50
B	K50	2	F50
C	U51	3	E51
D	K51	4	F51
E	U52	5	E52
F	K52	6	F52
H	U53	7	E53
J	K53	8	F53
K	U54	9	E54
L	K54	10	F54
M	U60	11	E60
N	K60	12	F60
P	U61	13	E61
R	K61	14	F61
S	U62	15	E62
T	K62	16	F62
U	U63	17	E63
V	K63	18	F63
W	U64	19	E64
X	K64	20	F64
Y	U65	21	E65
Z	K65	22	F65

BOARD 3 PLUG 3

A	IWTM'	1 IWTM'
B	Y COMM	2 Y COMM
C	D5	3 D4
D	-D8	4 D6
E	-IA1	5 D2
F	IA2	6 D1
H	D7	7 -GO
J	D0	8 IA1
K	-D0	9 -D2
L	E1, Es	10 D3
M	G1	11 GO
N	D8	12 E0
P	-D1	13 D9, Ds
R	-E1, -Es	14 -D4
S	-D9, -Ds	15 -D7
T	-IA2	16 -D5
U	-E0	17 -D6
V	-G1	18 -D3

BOARD 3 PLUG 4

A	N-C	1 N-C
B	-15	2 -15
C	F45	3 F45
D	E45	4 E45
E	GND	5 GND
F	N-C	6 N-C

BOARD 5, PLUG 1

A	-15V	1	-15V
B	GND	2	GND
C	-2.4V	3	-2.4V
D	H1B	4	F.F. CLK.
E	J25	5	E25
F	K25	6	F25
H	J24	7	E24
J	K24	8	F24
K	J23	9	E23
L	K23	10	F23
M	J22	11	E22
N	K22	12	F22
P	J21	13	E21
R	K21	14	F21
S	J20	15	E20
T	K20	16	F20
U	J30	17	E30
V	K30	18	F30
W	J31	19	E31
X	K31	20	F31
Y	J32	21	E32
Z	K32	22	F32

BOARD 6, PLUG 2

A	LC06	1	LC06
B	ISCL(-)	2	ISCL(+)
C	ISQL(-)	3	ISQL(+)
D	LIQM	4	YSKIC
E	LIQN	5	LIQN
F	HQC4	6	HQC4
H	HQC5	7	HQC5
J	HQC0	8	HQC1
K	J62	9	J62
L	HQC3	10	HQC3
M	HQC2	11	HQC2
N	LQS1	12	LQS1
P	LQS2	13	LQS2
R	LQS3	14	YGNPS
S	LQS4	15	LQS4
T	LQS5	16	LQS5
U	LQS6	17	LQS6
V	LQS7	18	LQS7

BOARD 6, PLUG 6

A	LTBS	1	LTBS
B	LIWF	2	LIWF
C	LCCF	3	LCCF
D	LICF	4	LICF
E	LTBC	5	LTBC
F	LDCF	6	LDCF
H	LIOCI	7	LTDC
J	LRDR	8	LRDR
K	LM23	9	LM23
L	LTKB	10	LTKB
M	LTSB	11	LTSB
N	LTCB	12	LTCB
P	LSTO	13	LBRS
R	LK25	14	LKBF
S	LJZ4	15	LIBF
T	LJZ5	16	LDBF
U	LOUT	17	LCBF
V	LJBF	18	LJBF

BOARD 12, PLUG 1

A	-15V	1	-15V
B		2	
C		3	
D	RCY	4	
E	ROM CLK	5	
F		6	
H	E13	7	E00
J	E12	8	F00
K	F13	9	F02
L	F11	10	E04
M	E03	11	E01
N	F10	12	E02
P	GND	13	F01
R	GND	14	GND
S	GND	15	GND
T		16	
U		17	-15V
V		18	GND

BOARD 14, PLUG 2

A	LIC2	1	LIC2
B	LICO	2	LICO
C	LIC3	3	LIC3
D	LIC1	4	LIC1
E		5	
F	BIAS	6	BIAS
H	LIB2	7	LIB2
J	LIB0	8	LIB0
K	LIB1	9	LIB1
L	LIB4	10	LIB4
M	LIB3	11	LIB3
N	LSTO	12	LSTO
P	LK25	13	LK25
R	LJZ4	14	LJZ4
S	LOUT	15	LJZ5
T	-15V	16	LJ50
U	GND	17	LQ53-54
V		18	LQ52-54

BOARD 2, PLUG 3

A	-2.4V	1	-15V
B	F65	2	E65
C	F64	3	E64
D	F63	4	E63
E	F62	5	E62
F	F61	6	E61
H	F60	7	E60
J	F54	8	E54
K	F53	9	E53
L	F52	10	E52
M	F51	11	E51
N	F50	12	E50
P	F00	13	E00
R	F01	14	E01
S	F02	15	E02
T	F03	16	E03
U	F04	17	E04
V	F10	18	E10
W	F11	19	E11
X	F12	20	E12
Y	F13	21	E13
Z	HIPS	22	GND.

BOARD 4, PLUG 1

A	-15	1	-15
B	GND	2	GND
C	-2.4	3	-2.4
D	CHA	4	E11
E	F25	5	F25
F	F25B	6	E24
H	F24	7	F24
J	F24B	8	ADV
K	F23B	9	IDFF
L	F23	10	F23
M	F11	11	F11
N	IDC1	12	IDC1
P	GND	13	GND
R	IDE1	14	IDE1
S		15	
T	LSAN	16	LSAN
U		17	
V	F41B	18	F41B
W	IIBB	19	IIBB
X	F41	20	F41
Y	F40B	21	F40B
Z	F40	22	F40

BOARD 5, PLUG 2

A	J33	1	E33
B	K33	2	F33
C	J34	3	E34
D	K34	4	F34
E	J73	5	E73
F	K73	6	F73
H	J72	7	E72
J	K72	8	F72
K	J71	9	E71
L	K71	10	F71
M	J70	11	E70
N	K70	12	F70
P	J40	13	E40
R	K40	14	F40
S	J41	15	E41
T	K41	16	F41
U	J42	17	E42
V	K42	18	F42
W	J43	19	E43
X	K43	20	F43
Y	J44	21	E44
Z	K44	22	F44

BOARD 6, PLUG 3

A	GND	1	GND
B	-15V NOT	2	-15V NOT
C	-15V	3	-15V
D	F25	4	10PS
E	F23	5	F24
F	F21	6	F22
H	E24	7	F20
J	E20	8	E23
K	NDGO	9	YKDN
L	YKDN	10	YRUN
M	YSKIC	11	
N	YGNPS	12	YDSP
P	NK23	13	NK23
R	NK22	14	NK22
S	NK21	15	NK21
T	NK20	16	NK20
U	NK24	17	NK24
V	NK25	18	NK25

BOARD 6, PLUG 7

A	SPARE 1	1	SPARE 1
B	SPARE 2	2	SPARE 2
C	SPARE 3	3	SPARE 3
D	NHLD	4	NHLD
E		5	
F	NHLD	6	NHLD
H	YCPS	7	YCPS
J		8	
K	60 CPS	9	60 CPS
L	60CPS	10	60CPS
M		11	
N	ROM CLK.	12	ROM CLK.
P	GND NHLD	13	GND NHLD
R	YCPS	14	YCPS
S	NHLD	15	NHLD
T	-2.4V	16	-2.4V
U	GND	17	GND
V	-15V	18	-15V

BOARD 13, PLUG 1

A	GND	1	GND
B	-15V	2	-15V
C	LDI3	3	LDI3
D	LDI2	4	ISDL(-)
E	LDI1	5	ISDL(+)
F	LDI0	6	LDI0
H	LAI3	7	LAI3
J	LAI2	8	ISAL(-)
K	LAI1	9	ISAL(+)
L	LAI0	10	LAI0
M	LPO1	11	ISPL(-)
N	LPO0	12	ISPL(+)
P	LCO1	13	LCO1
R	LCO0	14	LCO0
S	LCO5	15	LCO5
T	LCO4	16	LCO4
U	LCO2	17	LCO2
V	LCO3	18	LCO3

BOARD 9, PLUG 1

A	-15V	1	-15V
B	GND	2	GND
C		3	
D	ŻDHD	4	ŻDMV
E	ŻDRD	5	ŻDRL
F	F25	6	ŻDHL
H	ŻDRV	7	ŻDSL
J	HDRR	8	ŻACE
K	60 CPS	9	
L	P.S. SEN.	10	ERROR LIGHT

BOARD 8 PLUG 1

A	SPARE 1	1	SPARE 1
B	SPARE 2	2	SPARE 2
C	SPARE 3	3	SPARE 3
D		4	
E		5	
F		6	
H		7	
J		8	
K	GND	9	GND
L	-15V	10	-15V

NOTES:
1. ALL PLUGS ARE NUMBERED, SOCKETS ARE REFERRED TO BY PLUG NO.
2. PINS ARE BY BOARD PLUG, i.e. 3-2-F = BOARD 3, PLUG 2, PIN F.
3. DRAWINGS REFER TO COMPONENT SIDE UNLESS NOTED.
4. PLUGS NUMBERED COUNTER CLOCKWISE.

ENG. RESP. — DIV.

UNLESS OTHERWISE NOTED — TOLERANCES —
0.XX ±0.02 0.XXX ±0.005
ANGULAR ±
MACHINED SURFACES 63
— DO NOT SCALE —

ITEM	QTY	DESCRIPTION	PART NO.	DWG. NO.	MAT'L SPEC.

DRAWN	DATE	TITLE
AL HOWARD	6-10-69	INTERCONNECTIONS & BOARD REFERENCE LIST
ENGINEER		
APPROVED		
SUPERSEDES	FINISH	SCALE

HEWLETT PACKARD
LABORATORY INSTRUMENTS

NEXT ASSY. 91008
C - - -

HP 5280-0004 · PRINTED ON DIEPO 1020-10

SYM	REVISIONS	D

N M L K J H G F E D C B A

ZDMV (K04), (L07)
ZDRL
ZACE
ZDHL
ZDSL
ZDMV
HDRR
H.OUT
LTBS
LD13
F25
E24
NKDN
LD12
LD11
LD10
YBFN
YBFZ
LA04
LA03
LA02
LA01
LA00
LP01
LP00
K51
F11
F10
F01
E02
E00
F25
F22
F21
E23
E31
F23
F31
F32
F33
F34
E32
E33
E34
YC1021
YC1210
YC2111
J25
J24
J23
J22
J21
J20
J30
J33
J31
J32
K25
K24
K23
K22
K21
K20
K30
HIB
F13
E13
F30
E30
E10
J12
J13
J11
J10
J04
J03
J02
J01
J00
K13
K12
K11
K10
K04
K03
K02
K01
K00
E12
E11
E21
E22
E50
E61
E63
E51
E52
E41
E42
E43
E44
E45
E46
E47
E48
E49
E40
E60
E70
E71
E72
E73
E74
E75
E76
E77
E80
E81
E82
E83
E84
E85
E86
E87
E88
E90
E91
E92
E93
E94
E95
E96
E97
E98
E99
F00
F01
F02
F03
F04
F05
F06
F07
F08
F09
F10
F11
F12
F13
F14
F15
F16
F17
F18
F19
F20
F21
F22
F23
F24
F25
F26
F27
F28
F29
F30
F31
F32
F33
F34
F35
F36
F37
F38
F39
F40
F41
F42
F43
F44
F45
F46
F47
F48
F49
F50
F51
F52
F53
F54
F55
F56
F57
F58
F59
F60
F61
F62
F63
F64
F65
F66
F67
F68
F69
F70
F71
F72
F73
F74
F75
F76
F77
F78
F79
F80
F81
F82
F83
F84
F85
F86
F87
F88
F89
F90
F91
F92
F93
F94
F95
F96
F97
F98
F99
G00
G01
G02
G03
G04
G05
G06
G07
G08
G09
G10
G11
G12
G13
G14
G15
G16
G17
G18
G19
G20
G21
G22
G23
G24
G25
G26
G27
G28
G29
G30
G31
G32
G33
G34
G35
G36
G37
G38
G39
G40
G41
G42
G43
G44
G45
G46
G47
G48
G49
G50
G51
G52
G53
G54
G55
G56
G57
G58
G59
G60
G61
G62
G63
G64
G65
G66
G67
G68
G69
G70
G71
G72
G73
G74
G75
G76
G77
G78
G79
G80
G81
G82
G83
G84
G85
G86
G87
G88
G89
G90
G91
G92
G93
G94
G95
G96
G97
G98
G99
H00
H01
H02
H03
H04
H05
H06
H07
H08
H09
H10
H11
H12
H13
H14
H15
H16
H17
H18
H19
H20
H21
H22
H23
H24
H25
H26
H27
H28
H29
H30
H31
H32
H33
H34
H35
H36
H37
H38
H39
H40
H41
H42
H43
H44
H45
H46
H47
H48
H49
H50
H51
H52
H53
H54
H55
H56
H57
H58
H59
H60
H61
H62
H63
H64
H65
H66
H67
H68
H69
H70
H71
H72
H73
H74
H75
H76
H77
H78
H79
H80
H81
H82
H83
H84
H85
H86
H87
H88
H89
H90
H91
H92
H93
H94
H95
H96
H97
H98
H99
J00
J01
J02
J03
J04
J05
J06
J07
J08
J09
J10
J11
J12
J13
J14
J15
J16
J17
J18
J19
J20
J21
J22
J23
J24
J25
J26
J27
J28
J29
J30
J31
J32
J33
J34
J35
J36
J37
J38
J39
J40
J41
J42
J43
J44
J45
J46
J47
J48
J49
J50
J51
J52
J53
J54
J55
J56
J57
J58
J59
J60
J61
J62
J63
J64
J65
J66
J67
J68
J69
J70
J71
J72
J73
J74
J75
J76
J77
J78
J79
J80
J81
J82
J83
J84
J85
J86
J87
J88
J89
J90
J91
J92
J93
J94
J95
J96
J97
J98
J99
K00
K01
K02
K03
K04
K05
K06
K07
K08
K09
K10
K11
K12
K13
K14
K15
K16
K17
K18
K19
K20
K21
K22
K23
K24
K25
K26
K27
K28
K29
K30
K31
K32
K33
K34
K35
K36
K37
K38
K39
K40
K41
K42
K43
K44
K45
K46
K47
K48
K49
K50
K51
K52
K53
K54
K55
K56
K57
K58
K59
K60
K61
K62
K63
K64
K65
K66
K67
K68
K69
K70
K71
K72
K73
K74
K75
K76
K77
K78
K79
K80
K81
K82
K83
K84
K85
K86
K87
K88
K89
K90
K91
K92
K93
K94
K95
K96
K97
K98
K99
L00
L01
L02
L03
L04
L05
L06
L07
L08
L09
L10
L11
L12
L13
L14
L15
L16
L17
L18
L19
L20
L21
L22
L23
L24
L25
L26
L27
L28
L29
L30
L31
L32
L33
L34
L35
L36
L37
L38
L39
L40
L41
L42
L43
L44
L45
L46
L47
L48
L49
L50
L51
L52
L53
L54
L55
L56
L57
L58
L59
L60
L61
L62
L63
L64
L65
L66
L67
L68
L69
L70
L71
L72
L73
L74
L75
L76
L77
L78
L79
L80
L81
L82
L83
L84
L85
L86
L87
L88
L89
L90
L91
L92
L93
L94
L95
L96
L97
L98
L99
M00
M01
M02
M03
M04
M05
M06
M07
M08
M09
M10
M11
M12
M13
M14
M15
M16
M17
M18
M19
M20
M21
M22
M23
M24
M25
M26
M27
M28
M29
M30
M31
M32
M33
M34
M35
M36
M37
M38
M39
M40
M41
M42
M43
M44
M45
M46
M47
M48
M49
M50
M51
M52
M53
M54
M55
M56
M57
M58
M59
M60
M61
M62
M63
M64
M65
M66
M67
M68
M69
M70
M71
M72
M73
M74
M75
M76
M77
M78
M79
M80
M81
M82
M83
M84
M85
M86
M87
M88
M89
M90
M91
M92
M93
M94
M95
M96
M97
M98
M99
N00
N01
N02
N03
N04
N05
N06
N07
N08
N09
N10
N11
N12
N13
N14
N15
N16
N17
N18
N19
N20
N21
N22
N23
N24
N25
N26
N27
N28
N29
N30
N31
N32
N33
N34
N35
N36
N37
N38
N39
N40
N41
N42
N43
N44
N45
N46
N47
N48
N49
N50
N51
N52
N53
N54
N55
N56
N57
N58
N59
N60
N61
N62
N63
N64
N65
N66
N67
N68
N69
N70
N71
N72
N73
N74
N75
N76
N77
N78
N79
N80
N81
N82
N83
N84
N85
N86
N87
N88
N89
N90
N91
N92
N93
N94
N95
N96
N97
N98
N99
P00
P01
P02
P03
P04
P05
P06
P07
P08
P09
P10
P11
P12
P13
P14
P15
P16
P17
P18
P19
P20
P21
P22
P23
P24
P25
P26
P27
P28
P29
P30
P31
P32
P33
P34
P35
P36
P37
P38
P39
P40
P41
P42
P43
P44
P45
P46
P47
P48
P49
P50
P51
P52
P53
P54
P55
P56
P57
P58
P59
P60
P61
P62
P63
P64
P65
P66
P67
P68
P69
P70
P71
P72
P73
P74
P75
P76
P77
P78
P79
P80
P81
P82
P83
P84
P85
P86
P87
P88
P89
P90
P91
P92
P93
P94
P95
P96
P97
P98
P99
Q00
Q01
Q02
Q03
Q04
Q05
Q06
Q07
Q08
Q09
Q10
Q11
Q12
Q13
Q14
Q15
Q16
Q17
Q18
Q19
Q20
Q21
Q22
Q23
Q24
Q25
Q26
Q27
Q28
Q29
Q30
Q31
Q32
Q33
Q34
Q35
Q36
Q37
Q38
Q39
Q40
Q41
Q42
Q43
Q44
Q45
Q46
Q47
Q48
Q49
Q50
Q51
Q52
Q53
Q54
Q55
Q56
Q57
Q58
Q59
Q60
Q61
Q62
Q63
Q64
Q65
Q66
Q67
Q68
Q69
Q70
Q71
Q72
Q73
Q74
Q75
Q76
Q77
Q78
Q79
Q80
Q81
Q82
Q83
Q84
Q85
Q86
Q87
Q88
Q89
Q90
Q91
Q92
Q93
Q94
Q95
Q96
Q97
Q98
Q99
R00
R01
R02
R03
R04
R05
R06
R07
R08
R09
R10
R11
R12
R13
R14
R15
R16
R17
R18
R19
R20
R21
R22
R23
R24
R25
R26
R27
R28
R29
R30
R31
R32
R33
R34
R35
R36
R37
R38
R39
R40
R41
R42
R43
R44
R45
R46
R47
R48
R49
R50
R51
R52
R53
R54
R55
R56
R57
R58
R59
R60
R61
R62
R63
R64
R65
R66
R67
R68
R69
R70
R71
R72
R73
R74
R75
R76
R77
R78
R79
R80
R81
R82
R83
R84
R85
R86
R87
R88
R89
R90
R91
R92
R93
R94
R95
R96
R97
R98
R99
S00
S01
S02
S03
S04
S05
S06
S07
S08
S09
S10
S11
S12
S13
S14
S15
S16
S17
S18
S19
S20
S21
S22
S23
S24
S25
S26
S27
S28
S29
S30
S31
S32
S33
S34
S35
S36
S37
S38
S39
S40
S41
S42
S43
S44
S45
S46
S47
S48
S49
S50
S51
S52
S53
S54
S55
S56
S57
S58
S59
S60
S61
S62
S63
S64
S65
S66
S67
S68
S69
S70
S71
S72
S73
S74
S75
S76
S77
S78
S79
S80
S81
S82
S83
S84
S85
S86
S87
S88
S89
S90
S91
S92
S93
S94
S95
S96
S97
S98
S99
T00
T01
T02
T03
T04
T05
T06
T07
T08
T09
T10
T11
T12
T13
T14
T15
T16
T17
T18
T19
T20
T21
T22
T23
T24
T25
T26
T27
T28
T29
T30
T31
T32
T33
T34
T35
T36
T37
T38
T39
T40
T41
T42
T43
T44
T45
T46
T47
T48
T49
T50
T51
T52
T53
T54
T55
T56
T57
T58
T59
T60
T61
T62
T63
T64
T65
T66
T67
T68
T69
T70
T71
T72
T73
T74
T75
T76
T77
T78
T79
T80
T81
T82
T83
T84
T85
T86
T87
T88
T89
T90
T91
T92
T93
T94
T95
T96
T97
T98
T99
U00
U01
U02
U03
U04
U05
U06
U07
U08
U09
U10
U11
U12
U13
U14
U15
U16
U17
U18
U19
U20
U21
U22
U23
U24
U25
U26
U27
U28
U29
U30
U31
U32
U33
U34
U35
U36
U37
U38
U39
U40
U41
U42
U43
U44
U45
U46
U47
U48
U49
U50
U51
U52
U53
U54
U55
U56
U57
U58
U59
U60
U61
U62
U63
U64
U65
U66
U67
U68
U69
U70
U71
U72
U73
U74
U75
U76
U77
U78
U79
U80
U81
U82
U83
U84
U85
U86
U87
U88
U89
U90
U91
U92
U93
U94
U95
U96
U97
U98
U99
V00
V01
V02
V03
V04
V05
V06
V07
V08
V09
V10
V11
V12
V13
V14
V15
V16
V17
V18
V19
V20
V21
V22
V23
V24
V25
V26
V27
V28
V29
V30
V31
V32
V33
V34
V35
V36
V37
V38
V39
V40
V41
V42
V43
V44
V45
V46
V47
V48
V49
V50
V51
V52
V53
V54
V55
V56
V57
V58
V59
V60
V61
V62
V63
V64
V65
V66
V67
V68
V69
V70
V71
V72
V73
V74
V75
V76
V77
V78
V79
V80
V81
V82
V83
V84
V85
V86
V87
V88
V89
V90
V91
V92
V93
V94
V95
V96
V97
V98
V99
W00
W01
W02
W03
W04
W05
W06
W07
W08
W09
W10
W11
W12
W13
W14
W15
W16
W17
W18
W19
W20
W21
W22
W23
W24
W25
W26
W27
W28
W29
W30
W31
W32
W33
W34
W35
W36
W37
W38
W39
W40
W41
W42
W43
W44
W45
W46
W47
W48
W49
W50
W51
W52
W53
W54
W55
W56
W57
W58
W59
W60
W61
W62
W63
W64
W65
W66
W67
W68
W69
W70
W71
W72
W73
W74
W75
W76
W77
W78
W79
W80
W81
W82
W83
W84
W85
W86
W87
W88
W89
W90
W91
W92
W93
W94
W95
W96
W97
W98
W99
X00
X01
X02
X03
X04
X05
X06
X07
X08
X09
X10
X11
X12
X13
X14
X15
X16
X17
X18
X19
X20
X21
X22
X23
X24
X25
X26
X27
X28
X29
X30
X31
X32
X33
X34
X35
X36
X37
X38
X39
X40
X41
X42
X43
X44
X45
X46
X47
X48
X49
X50
X51
X52
X53
X54
X55
X56
X57
X58
X59
X60
X61
X62
X63
X64
X65
X66
X67
X68
X69
X70
X71
X72
X73
X74
X75
X76
X77
X78
X79
X80
X81
X82
X83
X84
X85
X86
X87
X88
X89
X90
X91
X92
X93
X94
X95
X96
X97
X98
X99
Y00
Y01
Y02
Y03
Y04
Y05
Y06
Y07
Y08
Y09
Y10
Y11
Y12
Y13
Y14
Y15
Y16
Y17
Y18
Y19
Y20
Y21
Y22
Y23
Y24
Y25
Y26
Y27
Y28
Y29
Y30
Y31
Y32
Y33
Y34
Y35
Y36
Y37
Y38
Y39
Y40
Y41
Y42
Y43
Y44
Y45
Y46
Y47
Y48
Y49
Y50
Y51
Y52
Y53
Y54
Y55
Y56
Y57
Y58
Y59
Y60
Y61
Y62
Y63
Y64
Y65
Y66
Y67
Y68
Y69
Y70
Y71
Y72
Y73
Y74
Y75
Y76
Y77
Y78
Y79
Y80
Y81
Y82
Y83
Y84
Y85
Y86
Y87
Y88
Y89
Y90
Y91
Y92
Y93
Y94
Y95
Y96
Y97
Y98
Y99
Z00
Z01
Z02
Z03
Z04
Z05
Z06
Z07
Z08
Z09
Z10
Z11
Z12
Z13
Z14
Z15
Z16
Z17
Z18
Z19
Z20
Z21
Z22
Z23
Z24
Z25
Z26
Z27
Z28
Z29
Z30
Z31
Z32
Z33
Z34
Z35
Z36
Z37
Z38
Z39
Z40
Z41
Z42
Z43
Z44
Z45
Z46
Z47
Z48
Z49
Z50
Z51
Z52
Z53
Z54
Z55
Z56
Z57
Z58
Z59
Z60
Z61
Z62
Z63
Z64
Z65
Z66
Z67
Z68
Z69
Z70
Z71
Z72
Z73
Z74
Z75
Z76
Z77
Z78
Z79
Z80
Z81
Z82
Z83
Z84
Z85
Z86
Z87
Z88
Z89
Z90
Z91
Z92
Z93
Z94
Z95
Z96
Z97
Z98
Z99
-15V
NDGO
YCOD
YGNPS
HIPS
ITBS
IDI3
IDI2
IDI1
IDI0
ITMS
ITBS
IDBF
IBRS
ICBF
IEBF
IIBF
IICF
IDCF
IEEC
IMSD
IWTM
ITCB
ITSB
IJBF
ICSF
IESF
IIBF
ITKB
ITCB
IBRS
IDBF
ITCB
ICBF
IBRS
IJBF
ITSB
ITCB
IWTM
ITCB
IEEC
IMSD
IDCF
IEEC
ITBC
IICF
IDCF
ICSF
IEEC
LK30
ITBC
DQCSF
ISC4
ISC1
LSSR
IBRS
IEBF

SYM	REVISIONS	APPROVED	DATE

N M L K J H G F E D C B A

IQS3 (G61) YSKD (J74) E54
IQS4 (U63) YBFR (A89) YFXD
IQS5 (J33) E22 (J23) E23
IQS6 (J14) E24 (J60) YBFU (G55) E10
IQS7 (G75) E30
IQS6 (G62) YRUN
IQS5 (A79) YRAP
IQS4 (H05) F50 (A85) YFX8
IQS3 (J04) F24, (J03) F25, (H20) YBFN
IQS2 (G08) E30 (F48) YC1102
IQS1 (J68) E50
IESR (H12) F24
IBRS (H54) F20
IJ50
IIBF (H61) YBFN
IJS1
IJS2
IQS234 (L06) F12
IQS334 (H01) E11
IQ2234 (L04) E12 (J108) F13
IIQM
ISC4*LNRUN
ISC2 (G19) E31 (G47) YC1021
IC60
IIQN
IC61
ISC4*LNRUN
IC62
ISC4*LNRUN
IC63
ISC4*LNRUN
LK06 (J07) E20
LRDS
IST0
IC64
IC65
IQS1 (U62) YBFU
IQS2 (F26) F31 (G48) YC1021
IQ93 (G34) E32 (F48) YC1210
(F15) F30 (F47) YC1102
IQS4 (H59) YB2111
IQS5 (F11) F40 (G09) N060 (F80) YCPS
IQS6 (H15) F24 (U52) E20 (H38) F21
ITEW (G65) YE2111, (G53) F73
(F21) YC2111, (F35) F33

K51 ISAN (G58) F65
15V (H04) E11
(N01) E13
(J72) E52
HOUT IM23 (L10) E13 (H72) F51
HFMT (G79) E51
IQS6 (H68) F52
HQC1 IQS5 (H63) F50
IQS4 (H14) F24
IQS3 (H70) F54
IQS2 (G25) F31 (G98) YC1021
IQS1 (U65) YBFZ
K50 IESR (J12) E24
IBRS (J54) E20
IK50
K51 IKS1
ISC1
K52 IQS254 (N02) E13
K53 IQS354 (F01) F10
K54 (G03) F11 (F03) E10
IIWF (J06) NKDN
HQC3 IQS7 (L35) YB1000
IQS1
K60 LRDS
IC60
K61 IQS2
IC61
ISC3 (J04) E45 (J73) YSST
K62 LK62
IC06 (H74) F61
K63 IC63
ISC2 (G20) E31 (G46) YC1021
K64 (J10) E23 (J15) E24
IC64
75 LRDS
K65 ISC3 (J75) NSST
IC65
IQS1 (H60) YBFN
IQS2 (F33) F32, (F46) YC1210
80 IQS3 (F80) F43
IQS7 (F84) NPSE (N09) F13
HQC3 IQS4 (H05) F25
IQS3 (H66) F51
IQS6 (H69) F53
IQS7 (H23) F28

(E6) J23
(C29) K22
E2L YBFN
(C37) K20
45 YB1000 (H24) (J29) (J54)
(C52) K31
YBFU (J20) (J26) (H48)
(C29) K22
(C36) K21
50 (C49) K30
(E24) J21
(N84) HQC2
(L23) K10
(L54) K50
E20 55 YBFZ (J18) (J30) (J37)
YB1000 (H24) (J29) (L49)
(E28) J21
YB1000 (C13) K23 YB2111
(E20) J22
60 (N44) HQC5
YEFU (E29) J21 YBFN
(N78) HQC2
(N42) HQC5
YBFZ (E8) J23
65 (LS2) HQC1
(C4) K24
E5Q ZACE
(N52) HQC4
IC62
LK62 70 IQS3
YIA1 (F43) F34
(L44) HDRR
YSST (L69) K62
E54 (N41) HQC5
NSST 75 (L76) K65
(L25) K10
E6Q (N73) J63
YS 0001
(L20) K11
E6L 80 ZDSL
(N18) J11
(N21) J10
E6S (L26) K10
(L69) K62
(L21) K11

F21 (C23) K22
(N15) J11
(E43) J31
(E15) J22
45 YB2111
(E36) J30
(C32) K21
YBFU (J20) (J26) (J49)
(N20) J10
(E18) J22
F20 50 (E24) J21
YBFN
YB2111
CODE
(N54) J50
E10 55 (E8) J45
(C22) K22
(E14) J23
(C15) K23
(N82) HQC2
60 (L78) HQC3
(N56) J51
(C16) K23
(L48) HQC1
F5Q (B5) J24
65 (N49) HQC4
F5L (L93) HQC3
YIA2
F53 (L47) HQC1
F53 (L84) HQC3
F54 70 (L50) HQC1
F60 (N19) J10
F51 (L95) HOUT
LRDS IC06
75 (L20) K62
F61 (N16) J11
LRDS IST0
LSTO YSSS FROM S.S. TESTER
(L24) K10
F69 (L19) K11
(E11) J25
80 (L28) K04
(L34) K03
F65 (N26) J03
(N24) J04
YRUN ZDSL

YC01022
YC01122
E34 YC00022
YC00122
45 (N79) HQC2
(L72) K64
YC 1021 (N64) J60
(L51) HQC1
(N40) HQC5
YC 2000 50 (E50) J32
(E51) J33
(C60) K33
F73 IO RESET (N85)
F11 (E23) J21
55 (N44) HQC5
E10 (C56) K32
(E38) J30
F65 (L41) K51
E51 (L27) J62
F65 60
YSKD (N4) HQC5
F65 (E6) J24
YRUN (N47) HQC4
F50 (E12) J45
YE 2111 65 IO RESET (N85)
F65 (C48) K24
F50 (E6) J24
ZDRV
70 (E78) J41
F40 YW22210
YW22200
YW22201
E41 75 ZDRV
YW02201
E44
E42 YW20022
E51 (L46) HFMT
80 YW21022
E43 YW20022
YW20122
F25
YBFU (N38) HQC5
E24

F33 YC01022
YC01122
F34 YIA1
YIA2
YC 1210 45 (N80) HQC2
(L79) HQC3
YC 1021 (N81) HQC2
YC 2000 (N51) HQC4
(F53) J33
YC 2111 50 (C61) K33
(C54) K32
F73 (E83) J43
(E52) J33
F72 55 (E46) J32
/E2111
(E77) J42
(E42) J31
F71 YE2111
(E65) J72
60 (E77) J41
(E37) J30
(C71) K71
(E74) J40
F70 (E65) J72
65 (E66) J71
YE2111
YE 2111 (E58) J73
(C66) K73
(C67) K72
70 YW22211
F40 (N83) HQC2
YW22201
YW22211
F41 (E75) J40
E54 75 (E81) J45
YW22210
F42 YW21122
YRUN (C80) K41
YW20122
80 (L80) HQC3
F43 YW31022
YW21122
F40 YW02201
NPSE (L81) HQC3
YRUN YFXD

IDCF
IEEC (F57) F71
ITBC (H43) F21
IICF (F12) F30
45 (F20) F31 (F11) F30
J32 IEBC (F54) F72
IMSD (A22) F10
ITBC (H34) F12
ITDC (A48) YDC2
50 IDCF (G50) YC2000
(G51) YC2000
IEEC (F53) F73
IICF (F49) YC2111
ITBC (H25) F23
J33 55 IJ34
J34 ISC1
J41 IIBF (F67) YE2111,
IGZE
J73 60 IEEC (F55) F88
IDEF (A58) YE2000
(A57) YE2000
IEEC (F31) F32
IGZE
J72 65 IIEF (F53), F71 (F54) F70
(F45) F70
IDEF (A78) E70
IEEC (F42) F31
IGZE
J71 70 IEEC (F17) F30
LJ70
ITEW (G64) F50, (A23) F10
J45 IJ40
J40 ITEW (F63) F70
75 ITWF (F74) F41
IJ41
J41 ITEW (E60) F71
IIWF (G70) E40
J42 80 ITEW (F56) F72
IQ4243 (H02) E11
ITEW (F75) E54 (H55) E10 (A15) E13
J43 ITEW (F52) F73
J44 IIJ44

K20 IITKB (A41) NK20
K24 ICSF (G66) F65, (G67) F50
IEEC (A55) E70
LK30
K30 ITBC (J50) E20
ITDC (A47) YDC0
(A21) F10
IMSD
IEEC (H56) E71
50 ITDC (A51) YDC1
K31 IDCF (G11) E30
ITBC (J46) E21
IICF (F15) F30
(F51) YC2111
ITBC (J32) E22
K32 IMSD (G56) E10
IDCF (G49) E30 (G55) E31
IEEC (F57) E72
(A59) E73
IDCF (G52) YC2000
60
K33 IICF (F50) YC2111
ITDC (A46) YDC3
ITBC (J24) E23
K34 ITWM
65 IEEC (G37) E33
K73 IIEF (F62) YE2111
IDEF (A62) YE2000
(A66) E71, (A67) E70
K72 IIEF (F29, YE2111
70 IEEC (G31) E32
IIEF (F45) F70
K71 IDEF (A73) E70
IEEC (G21) E31
(G14) E30
K70 75 LK70
IX40
K40 (A74) E70
ITEW (A78) E71
K41 IIK41
IIWF (F78) YRUN
K42 80 IT6W (A70) E72
IQ4243 (F02) F10
(A57) F12
K43 IT6W (A81) E73
K44 IWTM

LJ30 IDCF (C41) K20
NK20 IICF
LK30 IDCF
DQCSF 45 ISC+
LICF ISC2
YDC0 (C46) K30
YDC2 (E49) J32
DRDS IRDR
YDC1 50 (C50) K31
F12 (E18) J27
(C83) K43
DJ25 LSSR
DJ24
E70 55 (C43) K30
E71 (C49) K31
E72 (C58) K32
(E61) J71
E73 (C59) K33
60 (E62) J72
YDC3 (C62) K33
(C67) K73
E70 YE2000
E72 65
E71 (C68) K72
E70 (E67) J71
NFLT YFXD
E72 70 (C81) K42
LJ70 IIEF
IDEF
E70 (C72) K71
(C77) K40
75 IDEF
LK70 IIEF
IGZE
E71 (C78) K41
YRAD (N48) HQC4
YCPS 80 (N83) HQC2
E73 (C84) K43
YFXD (N42) HQC5
(N47) HQC4

ITEM	QTY	DESCRIPTION	PART NO.	DWG. NO.	M

UNLESS OTHERWISE NOTED — TOLERANCES — 0.XX ±0.02 0.XXX ±0.005 ANGULAR ± MACHINED SURFACES 63 — DO NOT SCALE —

ENG. RESP. — DIV.

DRAWN Bill Hays DATE 1-9-69
ENGINEER
APPROVED
SUPERSEDES

TITLE 9100B PAGE 2 INST. BOARD
FINISH SCALE

HEWLETT-PACKARD LABORATORY INST.

PRINTED ON OYO 1020-10

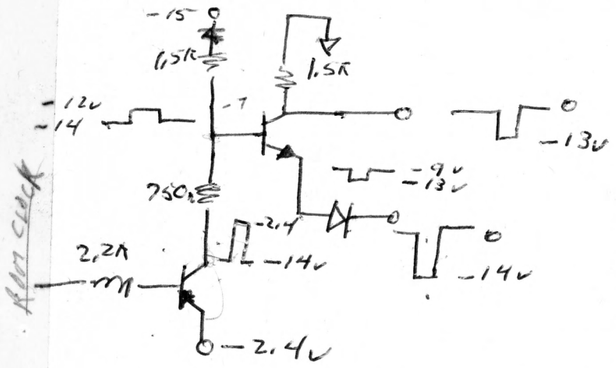

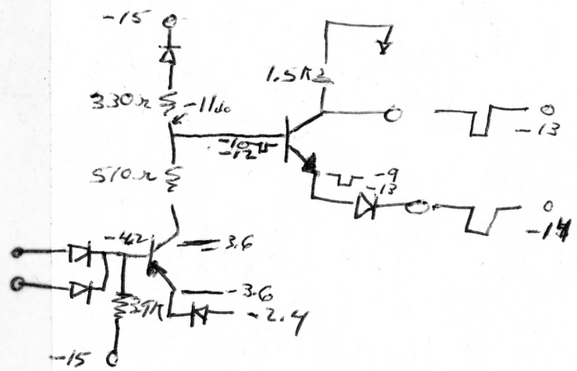

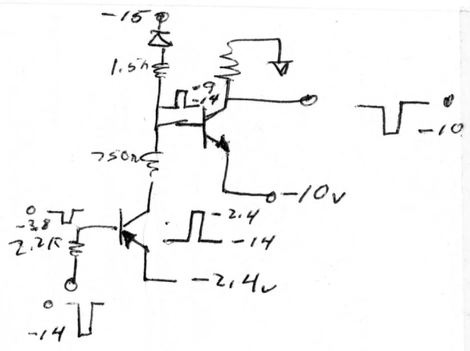

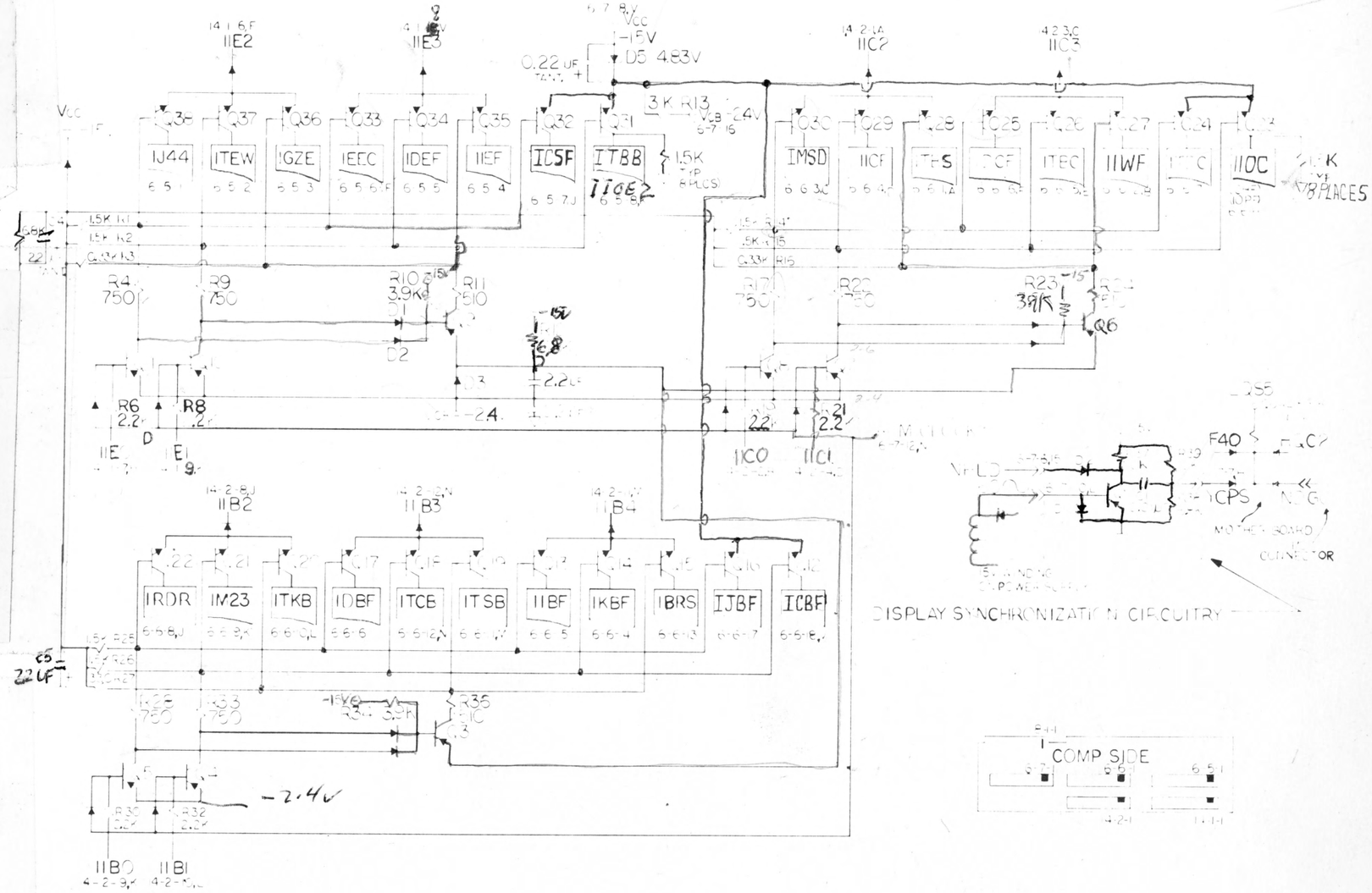

DISPLAY SYNCHRONIZATION CIRCUITRY

9100B RIGHT SIDE BOARD EXPANDER
09100-66508

9100B

LEFT SIDE BOARD (QUALIFIER)
09100-66509

SYM	REVISIONS	APPROVED	DATE

9100 B

UNLESS OTHERWISE SPECIFIED:
1) ALL TRANSISTORS 5080-4663
2) ALL DIODES 1901-0040
3) ALL RESISTORS AB ¼WATT ± 5%

YCHA — 6-1-14
YCOD — 6-2-J
YGNPS — 6-2-14

1-IQS1 (13-2-12,N)
2-IQS2 (13-2-13,P)
3-IQS3 (13-2-14,R)
4-IQS4 (13-2-15,S)
5-IQS5 (13-2-16,T)
6-IQS6 (13-2-17,U)
7-IQS7 (13-2-V)

7 6 5 4 3 2 1

COMPONENT LOCATION

CFF=1001 L52 L51 L50 L49 L48 L47

BFF=0001 N78
CFF=E0=1011 N79
CFF=D8=1010 N80
CFF=E8=1101 N81
N82
YCPS·NDQO·F40 N83
F24·F21·E20 N84

BFF=1001 L78
CFF=1110 L79 L80 L82 L83 L84 L81 L85 L62

CFF=E1=1100 N52 N51 N50 N49 N48 N47 N46

YFXD·F50 N49

CFF=D8=0000 N39 N40 N41 N42 N43

YBFU·E24·E10 N44
YBFU·E24·F25 N38
SPECIAL PROGRAM CALL N45

HQC1 6-2-8
HQC2 6-2-11,M
HQC3 6-2-10,L
HQC4 6-2-6,F
HQC5 6-2-7,H

LQS8 13-2-18
R R R R R 5.1K (TYP.)
20 19 18 17 16

D14 NDSP
D12 YCHA
D10 YCOD
D8 YGNPS
D6 YSKIC
6-2-4

D15 D13 D11 D9 D7

Q11
-15V
5.1K R21
1K R22
1K R23
YDSP 6-1-13

LQC1 13-2-8,J
LQC2 13-2-11,M
LQC3 13-2-10,L
LQC4 13-2-6,F
LQC5 13-2-7,H

R8 R7 Q5 Q6 R9
R2 R1 Q1 Q2 R3
R5 R4 Q3 Q4 R6
R14 R13 Q9 Q10 R15
R11 R10 Q7 Q8 R12

D23

D3 D1 D2 D5 D4
IQAM (J62)
6-2-9,K

ERROR LITE
250 ma MAX

-15V
R24 2K
1K R25
Q12
4.7K R26
R27 2K
D28
Q14 2N3644
D18 D19
R28 20K
-2.4V
D16 D17
LQC1 13-2-8,J
LQS7 6-2-8,V
6.8K R29
SET

D20 LQC4 13-2-6,F
D21 LQC1 13-2-8,J
D22 F/F CLOCK
R30 4.7K LQS7 6-2-17,U
RESET

ERROR LAMP CIRCUITRY

60HZ 6-1-1
60HZ 14-1-K
R31 1.8K
-2.4V -15V
6-9-3,B 9-1-,A
C1 4.7µf (TANT)
C2 4.7µf (TANT)
9-1-3,B
9-1-1
COMP. SIDE
6-2-1 6-1-1 6-9-1
13-2-1 13-1-1 12-1-1

KEY BOARD CONNECTOR
09100-66532

-15V 10K
RUN PROG
5080-4659
10K 2.2K 4.7K 470
FXD
-15V
6-4-3 6-4-2 6-4-6 6-4-16 6-4-8 6-4-4

E33 E32 E31 E30 G36 G35 G27 G12 G19
YC2000

YSKO G61 E54 J74

A79 G63 H16 J17
F85 F22 E21

YB2102

YDZR YSQH YSQD YB0002 YSQL YSQL

(B) A84 J43 E22 J33 E23 J23
E10 G55 E21 J14 J60
(A) YBFU G84 G85 G83 E24 F25

YE50 YENE YSPR YSQB YRAD YRUN YE30

E50 J68
ABS F50 H65
G15 E30

YBFZ YDNE YF54 YF24 YF50 YF52

F54 H70
F24 H64
F50 H63
F52 H68

YBFU YEZR (Ds)YSIN (Es)YSIN YB2111 YSQK YSQC

F30 F31 F32 F33 E20 E21 E22 E23 J55 J39 J56 J40 J65
YC1021 YBF2 (B)
G25 F14 G33 F36 G48 G45 F31 F26

E20 E21 E22 E23 J62 YBFU (A)
320 G34 (DS)
E32 E30 F31 F33 G13 F21 F36 F45 YC1210

F46 (Go) F32 F35

F15 F30 E31 F32 F33 G26 F47 (ES) F50 F59 YC1102 (C)

F20 F21 F22 H53 H45 H33 H59
F40 NDQO YCPS F71 G04 (YSQK) AB0
F24 F20 F21 H15 J52 H38 YSQC

F20 F21 E22 F23 H52 H60 J13 J28 (YBFU) H28
NPSE F84 N09 F13
(C) YC1102 F48 E30 608
E23 H23 J35 YB1000
YBFN H20 E24 J04 F25 J03

F43 F25 F51 F53 H09 H66 H69
FB0 YF43 YF25 YF51 YF53 YSQN YSQN YSQN

F20 F21 F22 H53 H45 H33 H59
F40 NDQO YCPS F71 G04 (YSQK) AB0
F24 F20 F21 H15 J52 H38 YSQC

INSTRUCTION LOGIC BOARD
09100-66556

ENG. RESP — DIV	ITEM	QTY	DESCRIPTION	PART NO.	DWG NO.	MAT'L SPEC
UNLESS OTHERWISE NOTED — TOLERANCES — 0 XX ±0.02 0 XXX ±0.005 ANGULAR ± MACHINED SURFACES 63 — DO NOT SCALE —						

AL HOWARD ENGINEER — DATE 6-2-9 — APPROVED — SUPERSEDES

TITLE: LEFT SIDE BOARD & QUALIFIER CIRCUITRY 556 & 509 BOARDS

FINISH — SCALE — NEXT ASSY. D-

HEWLETT PACKARD LABORATORY INSTRUMENTS

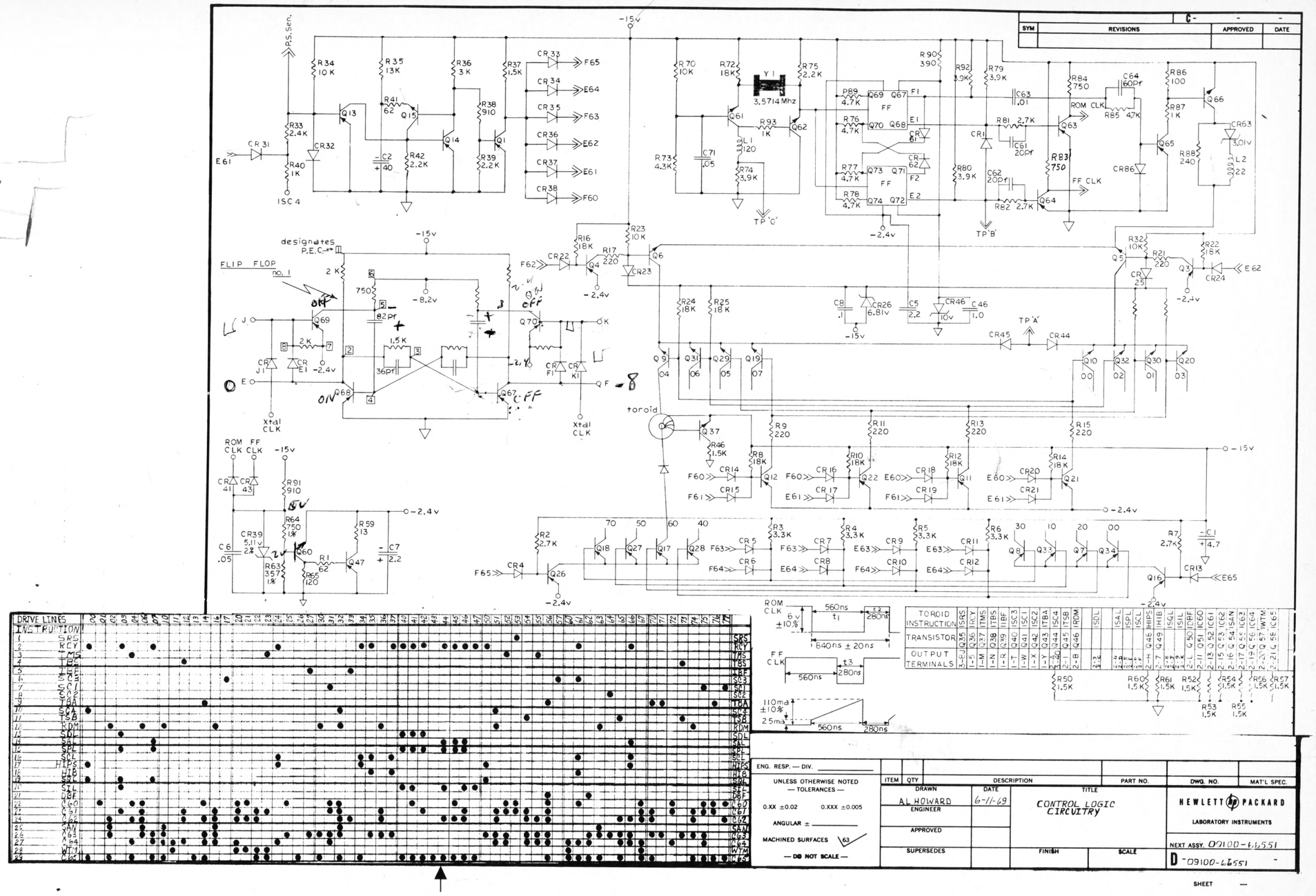

SYM
REVISIONS
APPROVED
DATE
C-
P.S. Sen.
ISC 4
E61
designates P.E.C.
FLIP FLOP no. 1
Xtal CLK
ROM CLK
FF CLK
toroid
3.5714 Mhz
TP 'C'
TP 'B'
TP 'A'
-15v
-2.4v
-8.2v
DRIVE LINES
INSTRUCTION
TOROID INSTRUCTION
TRANSISTOR
OUTPUT TERMINALS
560ns
280ns
840ns ± 20ns
110ma ±10%
25ma
ENG. RESP. — DIV.
UNLESS OTHERWISE NOTED — TOLERANCES —
0.XX ±0.02
0.XXX ±0.005
ANGULAR ±
MACHINED SURFACES
— DO NOT SCALE —
ITEM
QTY
DESCRIPTION
PART NO.
DWG. NO.
MAT'L SPEC.
DRAWN
AL HOWARD
DATE
6-11-69
ENGINEER
APPROVED
SUPERSEDES
TITLE
CONTROL LOGIC CIRCUITRY
FINISH
SCALE
HEWLETT PACKARD
LABORATORY INSTRUMENTS
NEXT ASSY. 09100-66551
D -09100-66551
SHEET —

			A-	-	-
SYM	REVISIONS		APPROVED	DATE	

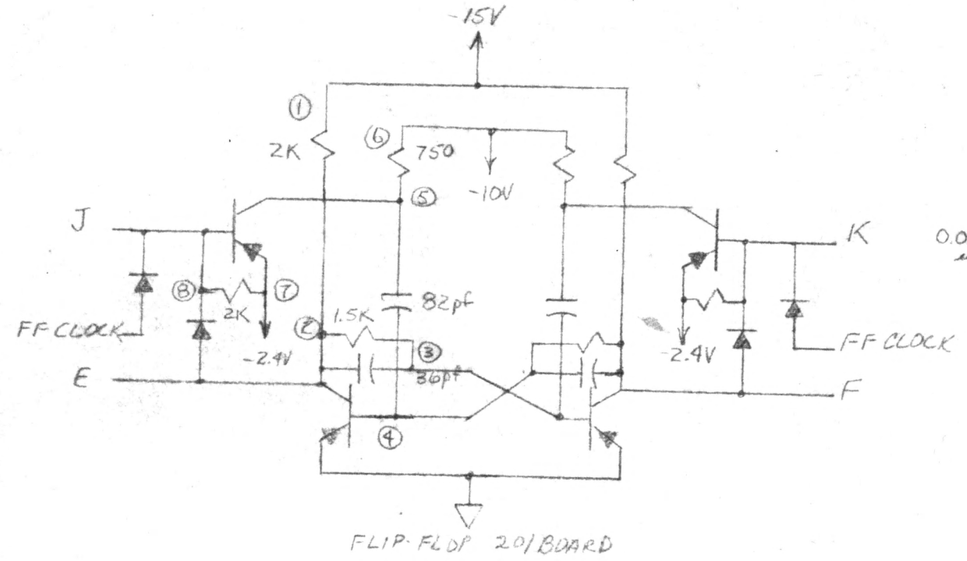

FLIP-FLOP 2/BOARD

* NUMBER IN THE CIRCLE REFER TO PEC PKG LEAD ARRANGEMENT.

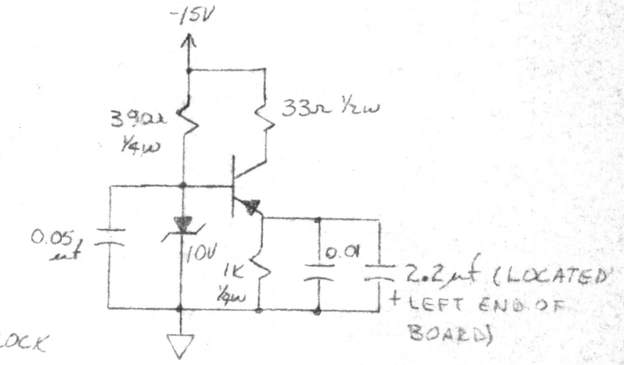

-10V SUPPLY 1/BOARD

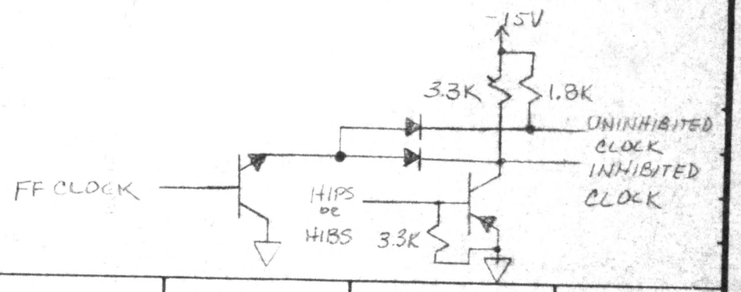

ENG. RESP. — DIV.	ITEM	QTY	DESCRIPTION	PART NO.	DWG. NO.	MAT'L SPEC.
UNLESS OTHERWISE NOTED — TOLERANCES — 0.XX ±0.02 0.XXX ±0.005 ANGULAR ± _____ MACHINED SURFACES 63 — DO NOT SCALE —						

DRAWN	DATE	TITLE		HEWLETT-PACKARD
JOHN SCOHY	7-2-68	J-K FLIP FLOP INHIBIT 10 VOLT SUPPLY		LABORATORY INSTRUMENTS
ENGINEER				NEXT ASSY.
APPROVED		FINISH	SCALE	A - - -
SUPERSEDES				SHEET —

HP 9280-0001 PRINTED ON DIEPO 1020-10

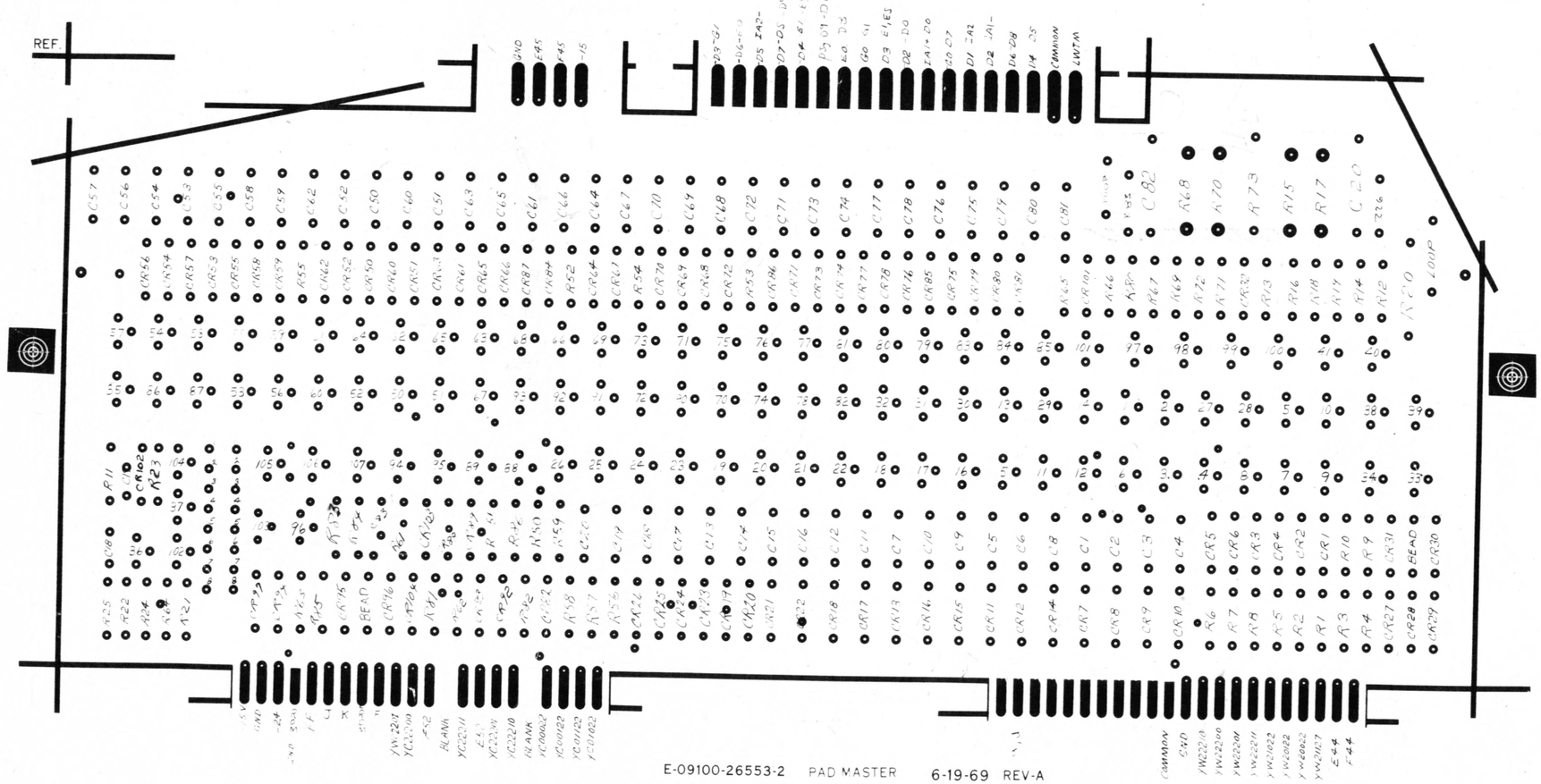
REF.
GND
E45
R45
-15
D8-D15
D5 EA2-
D7-D5 D9
D4 A1 E1
D3 D1-D1
D2 D3
D0 A1
D3 E1/E3
D2 - D0
EA1-D0
D0 D7
D1 EA2
D2 EA1-
D6-D8
D4 D5
COMMON
+VOLTS
C82
R68
R70
R73
R75
R17
C120
R36
LOOP
R20
R11
CR102
R23
R25
R22
R24
R21
CR96
BEAD
CR28
CR30
CR29
COMMON
GND
+5V
R10
R9
R8
R7
R6
R5
R4
R3
R2
R1
CR31
BEAD
CR27
CR26
CR25
CR24
CR23
CR22
CR21
CR20
CR19
CR18
CR17
CR16
CR15
CR14
CR13
CR12
CR11
CR10
CR9
CR8
CR7
CR6
CR5
CR4
CR3
CR2
CR1
C1
C2
C3
C4
C5
C6
C7
C8
C9
C10
C11
C12
C13
C14
C15
C16
C17
C18
C19
C20
C21
C22
C23
C24
C25
C26
C27
C28
C29
C30
C31
C32
C33
C34
C35
C36
C37
C38
C39
C40
C41
C42
C43
C44
C45
C46
C47
C48
C49
C50
C51
C52
C53
C54
C55
C56
C57
C58
C59
C60
C61
C62
C63
C64
C65
C66
C67
C68
C69
C70
C71
C72
C73
C74
C75
C76
C77
C78
C79
C80
C81
CR101
CR100
CR99
CR98
CR97
CR95
CR94
CR93
CR92
CR91
CR90
CR89
CR88
CR87
CR86
CR85
CR84
CR83
CR82
CR81
CR80
CR79
CR78
CR77
CR76
CR75
CR74
CR73
CR72
CR71
CR70
CR69
CR68
CR67
CR66
CR65
CR64
CR63
CR62
CR61
CR60
CR59
CR58
CR57
CR56
CR55
CR54
CR53
CR52
CR51
CR50
CR49
CR48
CR47
CR46
CR45
CR44
CR43
CR42
CR41
CR40
CR39
CR38
CR37
CR36
CR35
CR34
CR33
CR32
CR31
CR30
CR29
CR28
CR27
CR26
CR25
CR24
CR23
CR22
CR21
CR20
CR19
CR18
CR17
CR16
CR15
CR14
CR13
CR12
CR11
CR10
CR9
CR8
CR7
CR6
CR5
CR4
CR3
CR2
CR1
R11
R12
R13
R14
R15
R16
R17
R18
R19
R20
R21
R22
R23
R24
R25
R26
R27
R28
R29
R30
R31
R32
R33
R34
R35
R36
R37
R38
R39
R40
R41
R42
R43
R44
R45
R46
R47
R48
R49
R50

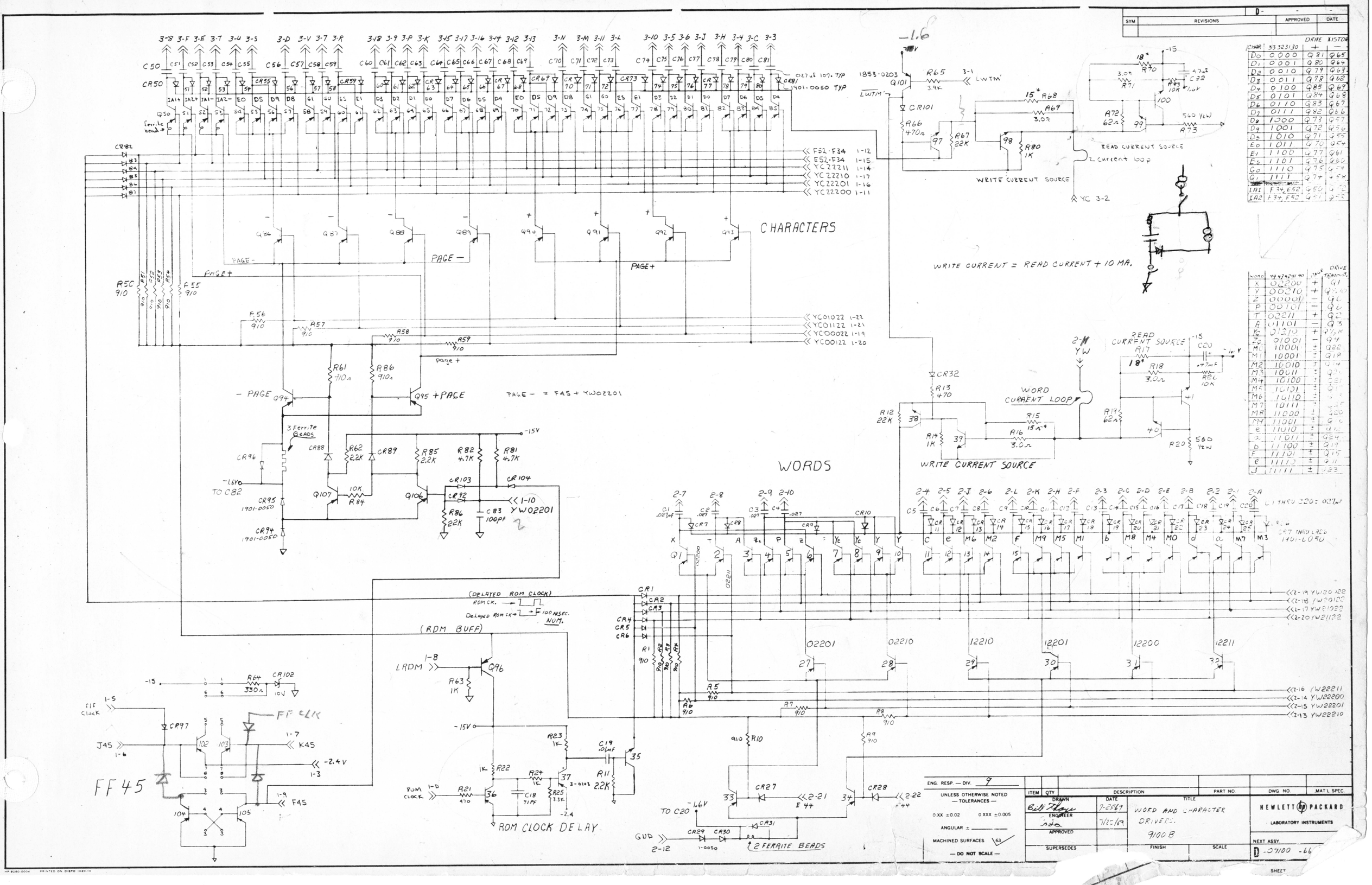

CHAR	33 323130	+	−
D0	0000	Q81	Q65
D1	0001	Q80	Q64
D2	0010	Q79	Q63
D3	0011	Q78	Q62
D4	0100	Q85	Q69
D5	0101	Q84	Q68
D6	0110	Q83	Q67
D7	0111	Q82	Q66
D8	1000	Q73	Q57
D9	1001	Q72	Q56
D5	1010	Q71	Q55
E0	1011	Q70	Q54
E1	1100	Q77	Q61
E5	1101	Q76	Q60
G0	1110	Q75	Q59
G1	1111	Q74	Q58
IA1	F34, E52	Q50	Q52
IA2	F34, F52	Q51	Q53

WORD	44 43 42 41 40	PAGE	DRIVE TRANSIST.
X	02200	+	Q1
Y	00210	+	Q9, 10
Z	00001	−	Q6
P	00101	−	Q6
T	02211	+	Q2
A	01101	−	Q3
Yc	01210	+	Q7, 8
Zc	01001	−	Q4
M0	10000	±	Q22
M1	10001	±	Q18
M2	10010	±	Q14
M3	10011	±	Q2[illegible]
M4	10100	±	Q21
M5	10101	±	Q1[illegible]
M6	10110	±	[illegible]
M7	10111	±	[illegible]
M8	11000	±	Q20
M9	11001	±	Q1[illegible]
e	11010	±	Q1[illegible]
a	11011	±	Q24
b	11100	±	Q19
F	11101	±	Q15
c	11110	±	Q11
d	11111	±	Q23

ENG. RESP. — DIV. 9

UNLESS OTHERWISE NOTED — TOLERANCES —
0.XX ±0.02 0.XXX ±0.005
ANGULAR ±
MACHINED SURFACES 63
— DO NOT SCALE —

ITEM	QTY	DESCRIPTION	PART NO.	DWG NO.	MAT'L SPEC.

DRAWN: Bill Thoye — DATE: 7-25-69
ENGINEER: [illegible] — 7/25/69
APPROVED
SUPERSEDES

TITLE: WORD AND CHARACTER DRIVERS. 9100 B

FINISH — SCALE

HEWLETT PACKARD LABORATORY INSTRUMENTS

NEXT ASSY. D-09100-66

SHEET

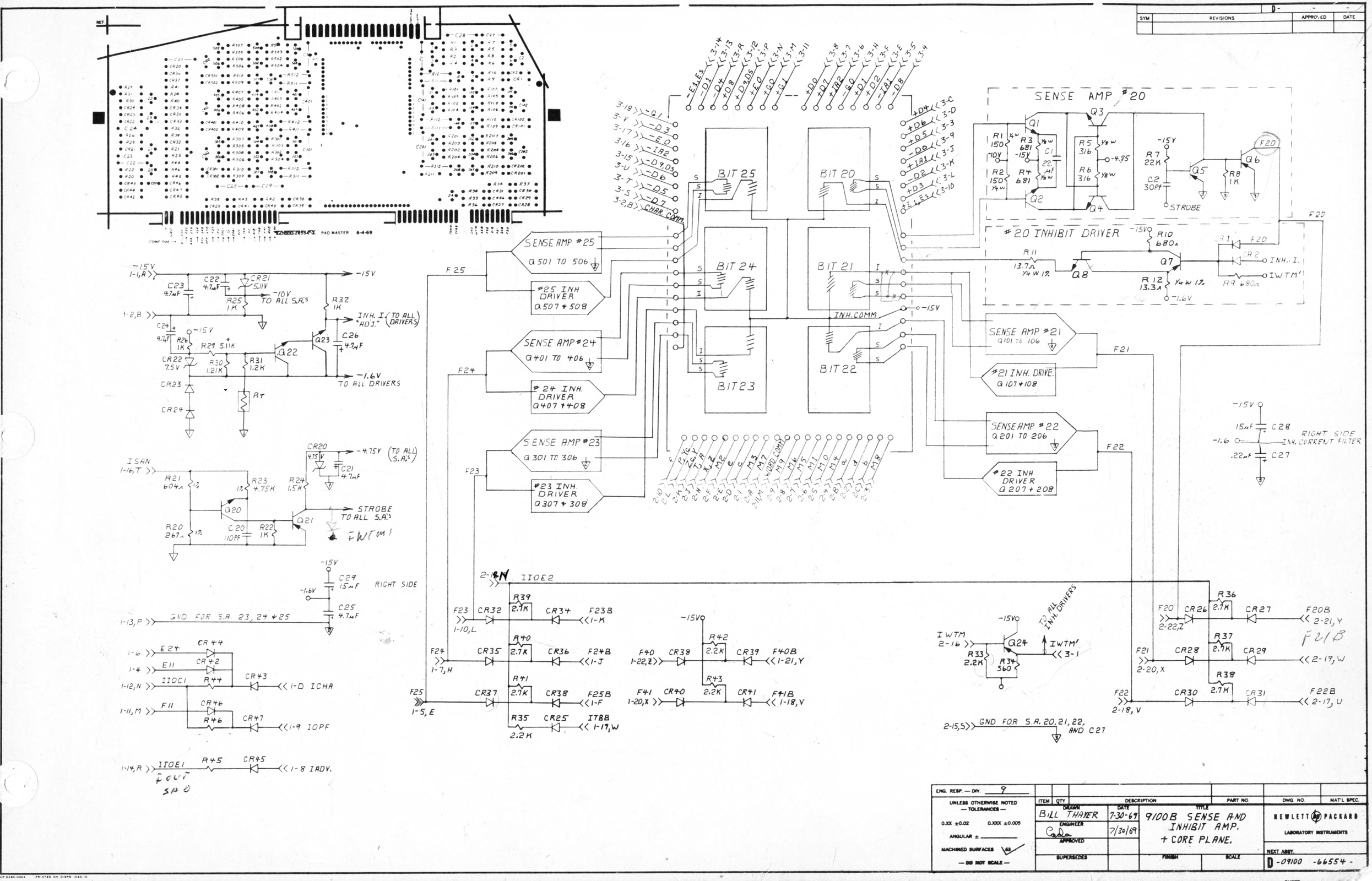

SYM	REVISIONS	APPROVED	DATE

ENG. RESP. — DIV. 9

UNLESS OTHERWISE NOTED — TOLERANCES —
0.XX ±0.02 0.XXX ±0.005
ANGULAR ±
MACHINED SURFACES 63
— DO NOT SCALE —

ITEM	QTY	DESCRIPTION	PART NO.	DWG. NO.	MAT'L SPEC.

DRAWN	DATE	TITLE
BILL THAYER	7-30-69	9100B SENSE AND INHIBIT AMP. + CORE PLANE.
ENGINEER: Cada	7/30/69	
APPROVED		
SUPERSEDES		FINISH / SCALE

NEWLETT PACKARD
LABORATORY INSTRUMENTS

NEXT ASSY.
D-09100 -66554-

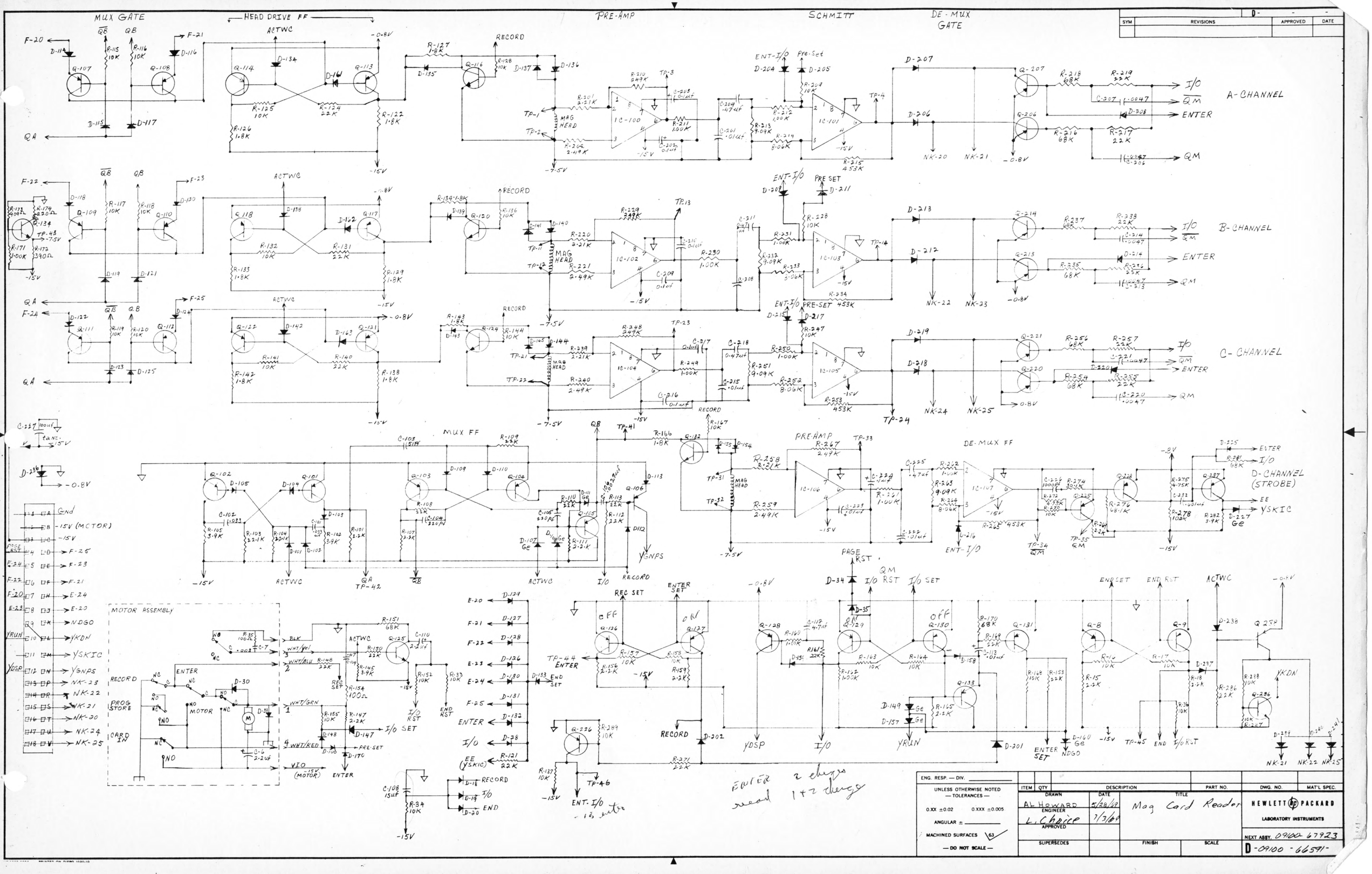
MUX GATE
HEAD DRIVE FF
PRE-AMP
SCHMITT
DE-MUX GATE
A-CHANNEL
B-CHANNEL
C-CHANNEL
D-CHANNEL (STROBE)
MUX FF
DE-MUX FF
MOTOR ASSEMBLY
ENTER 2 charges
read 1+2 charge
ENG. RESP. — DIV.
UNLESS OTHERWISE NOTED — TOLERANCES —
0.XX ±0.02 0.XXX ±0.005
ANGULAR ±
MACHINED SURFACES 63
— DO NOT SCALE —
ITEM QTY DESCRIPTION PART NO. DWG. NO. MAT'L SPEC.
DRAWN AL HOWARD 5/28/69
ENGINEER L. Choice 7/3/69
APPROVED
SUPERSEDES
TITLE Mag Card Reader
FINISH SCALE
HEWLETT PACKARD
LABORATORY INSTRUMENTS
NEXT ASSY. 09100-67923
D-09100-66591-

SYM	REVISIONS	APPROVED	DATE
	B -	-	-

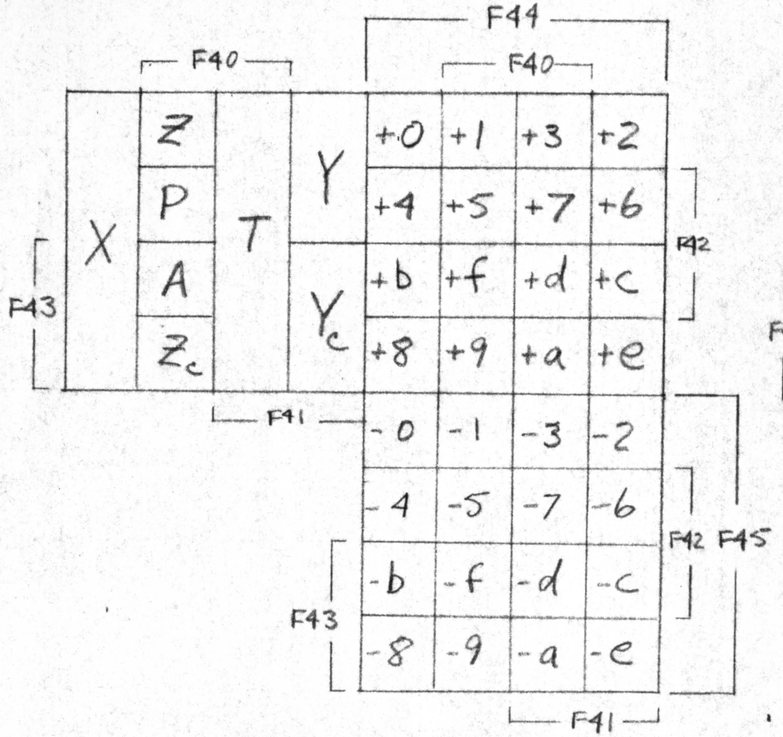

REGISTER MAP

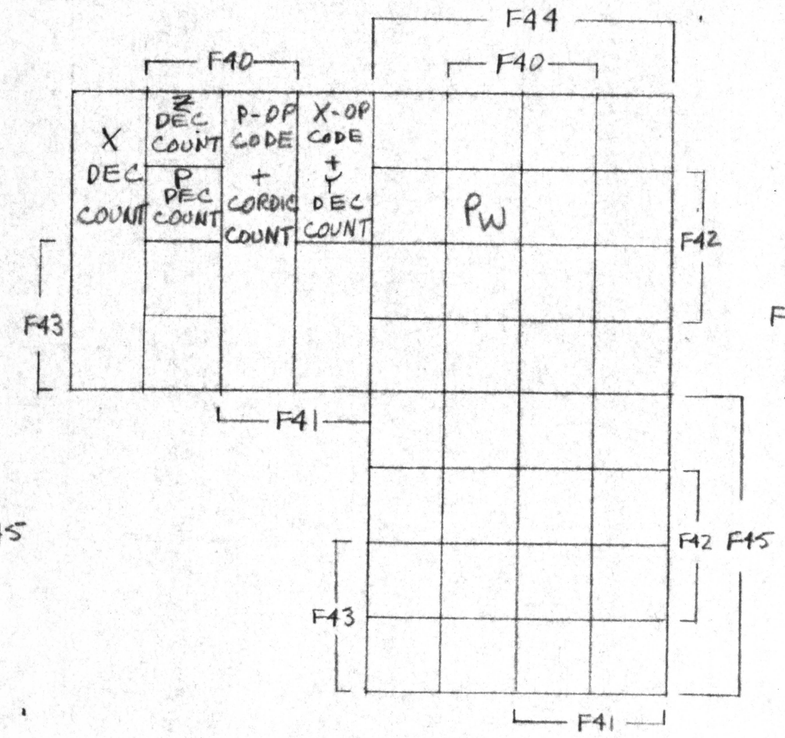

F34 · E52

INSTANT ACCESS 1

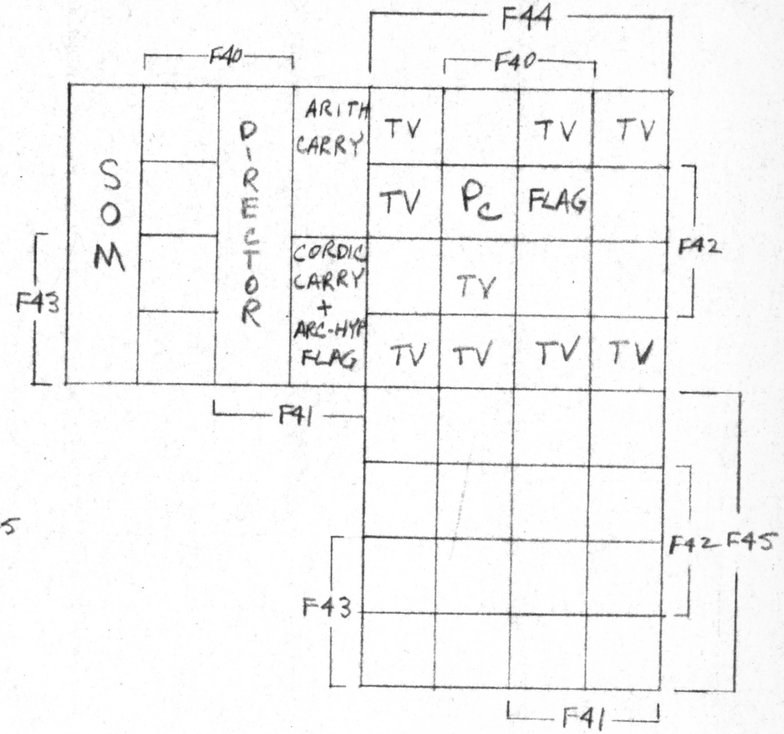

F34 · F52

INSTANT ACCESS 2

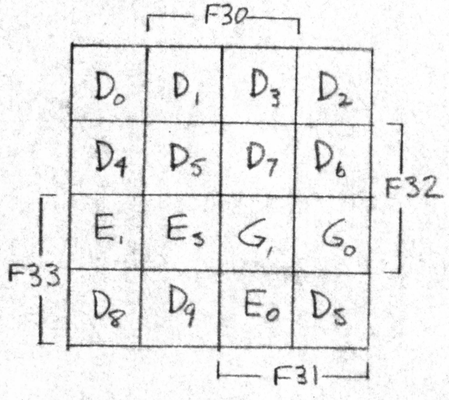

CHARACTER MAP

E34

OCTAL WORD	12	11	10	7	6	5	4	3	2	1	0	17	16	15	14	13
	e	9	8	7	6	5	4	3	2	1	0	d	c	f	b	a
CHARACTER	D_5	D_9	D_8	D_7	D_6	D_5	D_4	D_3	D_2	D_1	D_0	G_1	G_0	E_5	E_1	E_0

ENG. RESP. — DIV. _____

UNLESS OTHERWISE NOTED — TOLERANCES —

0.XX ±0.02 0.XXX ±0.005

ANGULAR ± _____

MACHINED SURFACES 63

— DO NOT SCALE —

ITEM	QTY	DESCRIPTION	PART NO.	DWG. NO.	MAT'L SPEC.

DRAWN: Rick Spangler	DATE: 5-5-69	TITLE: 9100 B CORE MAP	HEWLETT-PACKARD LABORATORY INSTRUMENTS
ENGINEER			NEXT ASSY.
APPROVED			
SUPERSEDES		FINISH / SCALE	B - - -

SHEET —

HP 9280-0002 PRINTED ON DIEPO 1020-10